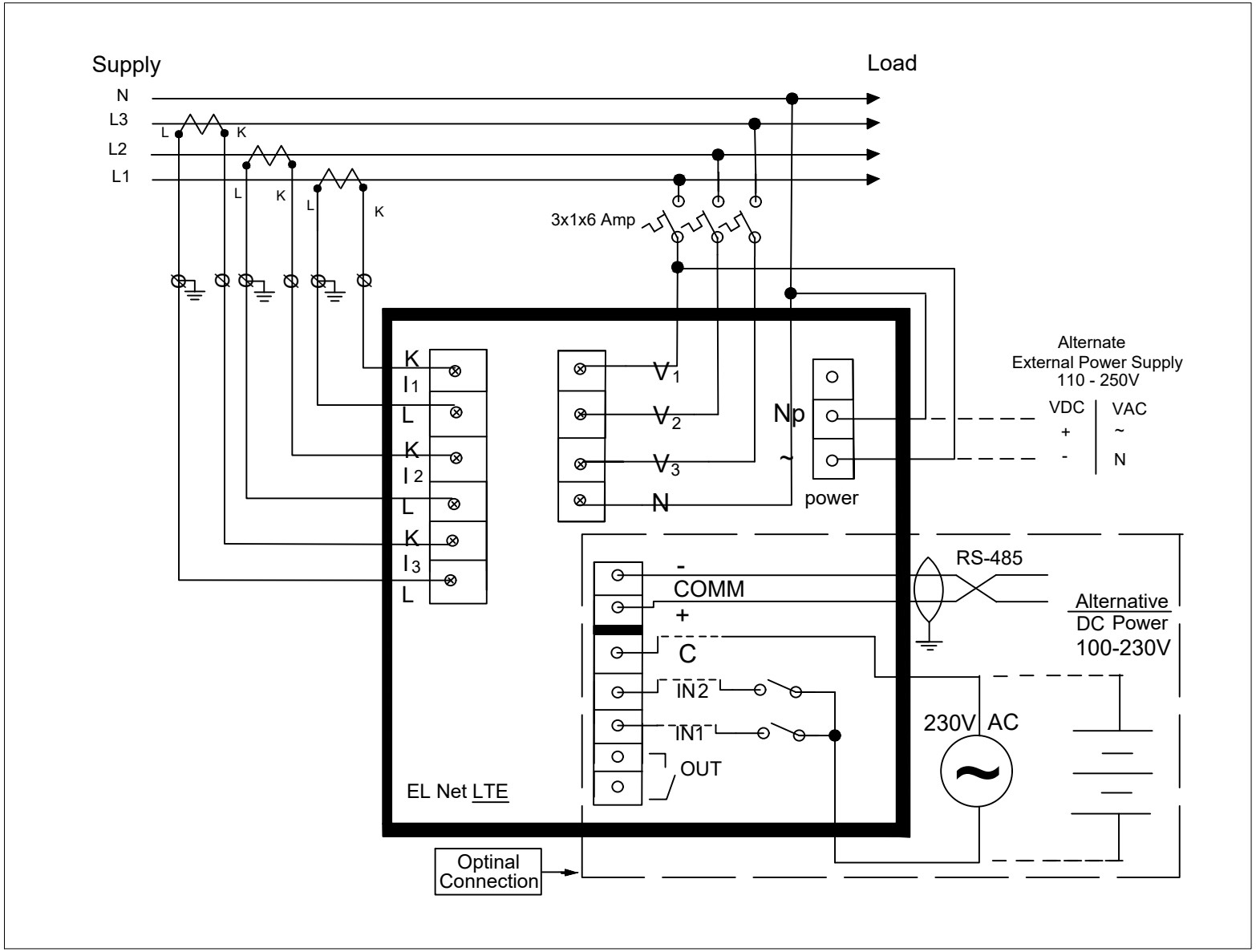
Supply
Load
N
L3
L2
L1
L
K
3x1x6 Amp
K
I1
L
K
I2
L
K
I3
L
V1
V2
V3
N
Np
~
power
Alternate
External Power Supply
110 - 250V
VDC
VAC
+
~
-
N
RS-485
-
COMM
+
C
IN2
IN1
OUT
EL Net LTE
Alternative
DC Power
100-230V
230V AC
Optinal
Connection